08LTR Free Space Narrow Linewidth Diode Laser Components

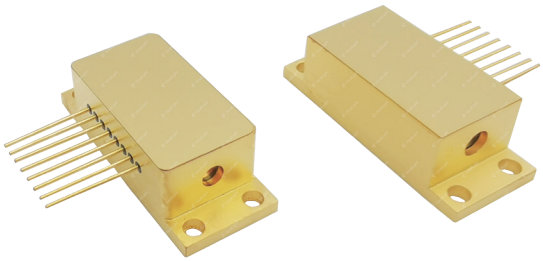

08LTR free space diode laser components, are featured products of RealLight's NL product line, utilizing wavelength-locking technique with volume Bragging gratings (VBG) and TE cooling, delivering stabilized power output, high Side-Mode Suppression Ratio, low temperature dependence of the lasing wavelength and various wavelengths.The compact design makes them perfectly suitable for handheld devices.

Key Features

- Compact design
- High stability
- Excellent reliability

Applications

Medical application

Spectrum analysis

Scientific research

Technical Specifications（25℃）

Package Type		08LTR(Free Space)					
Center Wavelength（nm）		638	785	808	830	981	1064
Optical	CW Output Power / P_{op} (mW)[1]	500	600	600	600	800	800
	Wavelength Tolerance (nm)	±0.5					
	Spectral Width / △λ (nm)	<0.1	<0.1	<0.3	<0.1	<0.3	<0.1
	Temperature Drift of Wavelength / △λ/△T (nm/℃)	0.01					
	Temperature Drift of Current / △λ/△I_{op} (nm/A)	0.05					
Electrical	Threshold Current / I_{th}（A）	0.5	0.4	0.3	0.4	0.3	0.4
	Operating Current / I_{op}（A）	1.1	1.1	1	1.2	1.2	1.5
	Operating Voltage / V_{op}（V）	2.2	2	2	1.8	1.5	1.8
	Slope Efficiency / η_{es}（W/A）	0.8	0.9	0.9	0.8	0.9	0.7
	PD Parameter / I_{pd} (μA)	<2000					
	Thermistor / Rt (kΩ/β (25℃))	10±1%/3930					
	TEC Max Current I_{max} (A)	2.5					
	TEC Max Voltage V_{max} (V)	6.3					

1. At output power below 200 mW, operation is near the laser threshold with degraded power stability.
2. Higher power options available upon request.
3. All the data in the above table are the typical values obtained from the tests at room temperature of 25℃, and the final data is subject to the final test report.

Other Parameters

Parameter	Operating Temperature /℃	Operating Relative Humidity /%	Storage Temperature /℃	Storage Relative Humidity /%	Lead Soldering Temperature (max/℃)
Min	10	-	-20	-	-
Max	30	75	70	90	250(10Sec.)

Order Information

Package	Wavelength (nm)	Output Power (mW)	Part Number
08LTR	638	500	R638±0.5-500mWW-08LTR-TG
	785	600	R785±0.5-600mWW-08LTR-TG
	808	600	R808±0.5-600mWW-08LTR-TG
	830	600	R830±0.5-600mWW-08LTR-TG
	981	800	R981±0.5-800mWW-08LTR-TG
	1064	800	R1064±0.5-800mWW-08LTR-TG

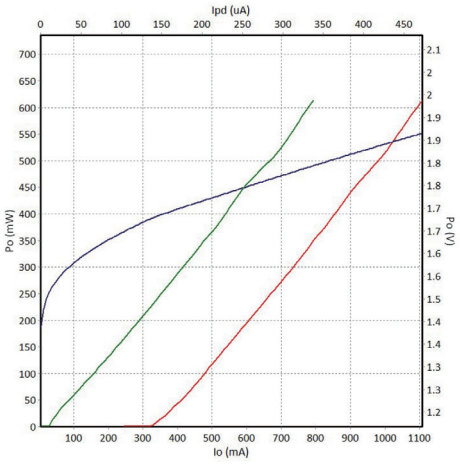

785nm P-I-V Graph

Part Numbering Schema

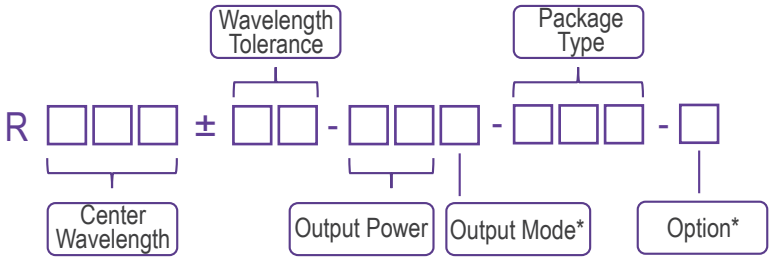

*Output Mode: W - Free Space

*Option: G - Narrow Linewidth

T - TEC

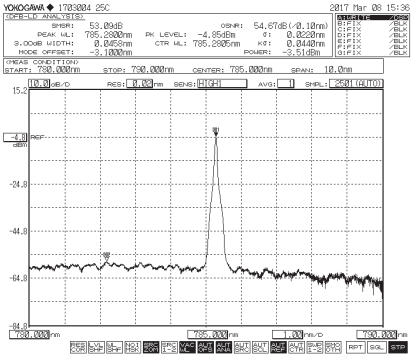

785nm Spectrum（SMSR>40dB）

Mechanical Drawings (in mm)

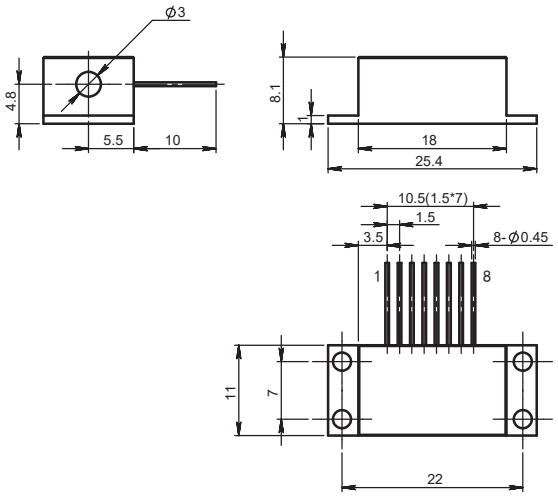

08LTR(L)

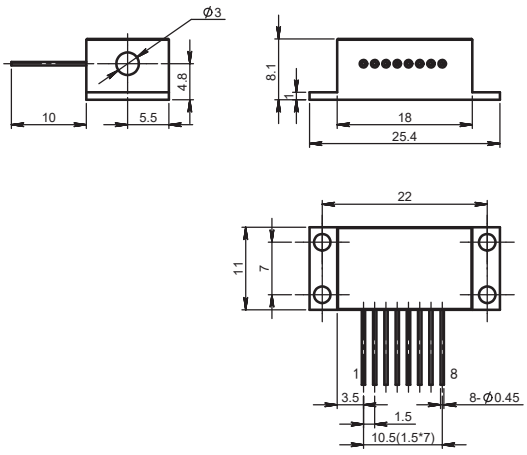

08LTR(R)

Pin	Function
1	Laser (-)
2	Laser (+)
3	Thermistor
4	Thermistor
5	PD(-)
6	PD(+)
7	TEC (+)
8	TEC (-)

08LTR(L) Package Dimensions

Pin	Function
1	Laser (+)
2	Laser (-)
3	Thermistor
4	Thermistor
5	PD(-)
6	PD(+)
7	TEC (-)
8	TEC (+)

08LTR(R) Package Dimensions



