14SBTF Fiber Pigtailed Narrow Linewidth Diode Laser Components

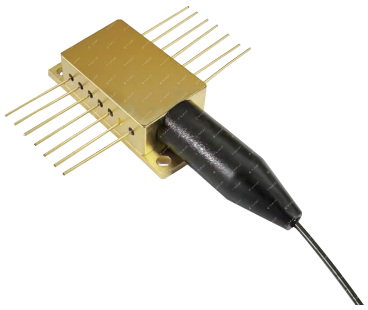

14SBTF Fiber Pigtailed Diode Laser Components, are featured products of RealLight's NL product line, utilizing wavelength-locking technique with volume Bragging gratings (VBG) and TE cooling, delivering stabilized power output, high Side-Mode Suppression Ratio, low temperature dependence of the lasing wavelength and various wavelengths.

Key Features

- Compact design
- High stability
- Excellent reliability

Applications

Medical application

Spectrum analysis

Scientific research

Technical Specifications（25℃）

Package Type		14SBTF (Fiber Pigtailed)						
Center Wavelength（nm）		532	638	785	808	830	981	1064
Optical	CW Output Power / P_{op} (mW)[1]	100	500	600	600	600	800	800
	Wavelength Tolerance (nm)	±0.5						
	Spectral Width / △λ (nm)	<0.1	<0.1	<0.1	<0.3	<0.1	<0.3	<0.1
	Temperature Drift of Wavelength / △λ/△T (nm/℃)	0.01						
	Temperature Drift of Current / △λ/△I_{op} (nm/A)	0.05	0.06	0.05	0.05	0.05	0.05	0.05
	SMSR	-	>35	>40				
Electrical	Threshold Current / I_{th}（A）	0.6	0.5	0.4	0.3	0.4	0.3	0.4
	Operating Current / I_{op}（A）	1	1.1	1.1	1.2	1.2	1.2	1.5
	Operating Voltage / V_{op}（V）	2.1	2.2	2	2	1.8	1.5	1.8
	Slope Efficiency / η_{es}（W/A）	-	0.8	0.7	0.9	0.8	0.9	0.7
	PD Parameter / I_{pd} (μA)	-	<2000					
	Thermistor / Rt (kΩ/β (25℃))	10±1%/3930						
	TEC Max Current I_{max} (A)	2.5						
	TEC Max Voltage V_{max} (V)	6.3						
Fiber	Fiber Core Diameter / dcore (μm)	105						
	Fiber Cladding Diameter / Dclad (μm)	125						
	Fiber Coating Diameter / Dbuffer (μm)	250						
	Fiber Length / L (cm)	100±10 (Customizable)						
	Numerical Aperture / NA	0.22						
	Connector	FC/PC，SMA905						

1. The 532 nm laser is a solid-state laser and can only be operated at a fixed power of 100 mW. Lasers of other wavelengths are diode lasers. When the output power is below 200 mW, the operating point approaches the laser threshold and power stability degrades.
2. Higher power options available upon request.
3. All the data in the above table are the typical values obtained from the tests at room temperature of 25℃, and the final data is subject to the final test report.

Other Parameters

Parameter	Operating Temperature /℃	Operating Relative Humidity /%	Storage Temperature /℃	Storage Relative Humidity /%	Lead Soldering Temperature (max/℃)
Min (785/808/830/976/1064nm)	10	-	-20	-	-
Max (785/808/830/976/1064nm)	30	75	70	90	250(10Sec.)
Min(638nm)	25	40	-20	-	-
Max(638nm)	30	55	70	60	250(10Sec.)

Order Information

Package	Wavelength (nm)	Output Power (mW)	Part Number
14SBTF	532	100	R532±0.5-100mWF-14SBTF-TG
	638	500	R638±0.5-500mWF-14SBTF-TG
	785	600	R785±0.5-600mWF-14SBTF-TG
	808	600	R808±0.5-600mWF-14SBTF-TG
	830	600	R830±0.5-600mWF-14SBTF-TG
	981	800	R981±0.5-800mWF-14SBTF-TG
	1064	800	R1064±0.5-800mWF-14SBTF-TG

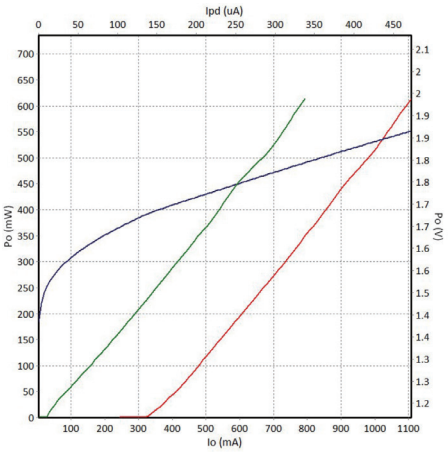

785nm P-I-V Graph

Part Numbering Schema

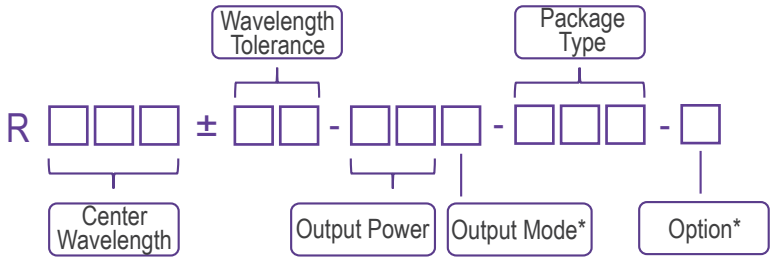

*Output Mode: F - Fiber Pigtailed

*Option：G - Narrow Linewidth

T - TEC

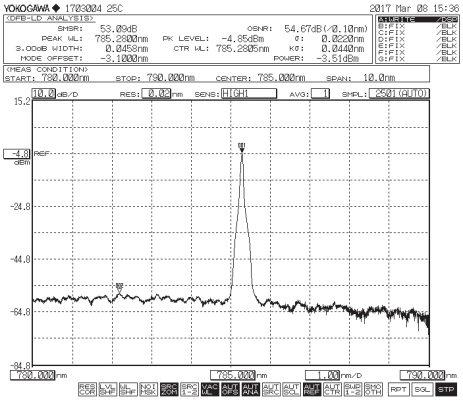

785nm Spectrum（SMSR>40dB）

Mechanical Drawings (in mm)

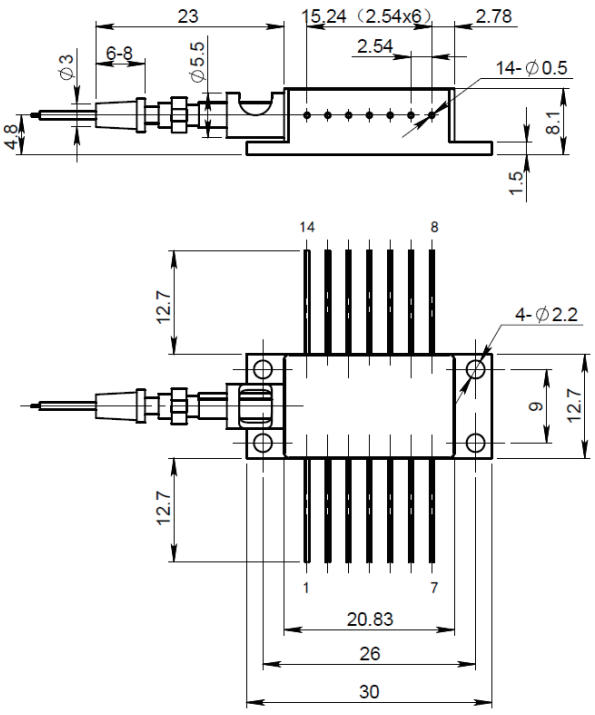

Pin	Function	Pin	Function
1	TEC (+)	8	-
2	Thermistor	9	-
3	PD(P)	10	Laser (+)
4	PD(N)	11	Laser (-)
5	Thermistor	12	-
6	-	13	Case
7	-	14	TEC (-)

