# AWMO-A Series Multi-mode Diode Laser Module

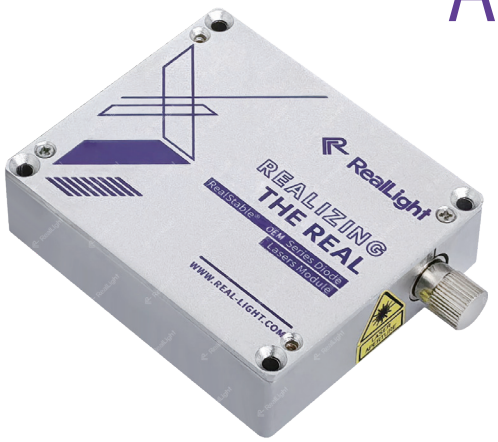


The AWMO-A series multi-mode diode laser module is a featured product of RealLight. Equipped with standard I/O interfaces, it can be easily embedded into customers' complete systems to deliver highly stable laser output. Integrated laser and TEC control circuits endow the module with excellent spectral performance and power stability. Customization and secondary development services are available upon request.

## Key Features

- Power stability < ±2%
- Low power consumption, typical < 5W
- Compact design, easily integrated

## Applications

Laser-induced fluorescence (LIF)

Fluorescence Spectrometer

Particle size analysis

Flow cytometer

Confocal microscopy

## Technical Specifications

| Optical Parameters | | | | | |
|---|---|---|---|---|---|
| Center Wavelength (nm) | 405 | 450 | 520 | 638 | 650 |
| Output Power (mW) | 100 | 100 | 100 | 130 | 130 |
| Wavelength Tolerance (nm) | ±10 | | | | |
| Linewidth (nm) | <3 | | | | |
| Power Stability (typ., @4h) | ±2%(P-P) | | | | |
| Output Fiber (μm/NA) | 105/0.22 | | | | |
| Connector | FC/PC, SMA905 | | | | |
| **System Parameters** | | | | | |
| Adjustbility % Full Power | 0~100% | | | | |
| Warm up Time (min) | 15 | | | | |
| Control Interface | PH2.0~10P, USB | | | | |
| Supply Voltage | 5VDC/2A | | | | |
| Power Consumption (typ., W) | <5 | | | | |
| Storage Humidity | 0~70% RH | | | | |
| Storage Temperature (℃) | -25~55 | | | | |
| Operating Temperature (℃) | 10~35 (heat sink is required) | | | | |
| Weight (g) | <150 | | | | |
| Dimensions (mm) | 76.2×63.5×28 | | | | |

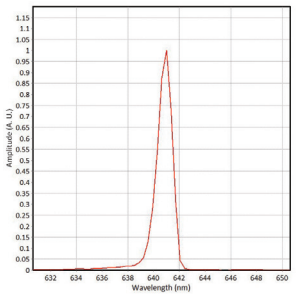


638nm laser spectrum

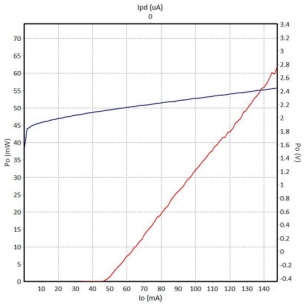


P-I-V Graph

Notes:

1. Higher power options available upon request.
2. All the data in the above table are the typical values obtained from the tests at room temperature of 25℃, and the final data is subject to the final test report.

## Ordering Information

| Wavelength (nm) | Output Power (mW) | Part Number | Connector |
|---|---|---|---|
| 405 | 100 | AWMO-A-405-IF(F)-100 | FC/PC |
| | 100 | AWMO-A-405-IF(S)-100 | SMA905 |
| 450 | 100 | AWMO-A-450-IF(F)-100 | FC/PC |
| | 100 | AWMO-A-450-IF(S)-100 | SMA905 |
| 520 | 100 | AWMO-A-520-IF(F)-100 | FC/PC |
| | 100 | AWMO-A-520-IF(S)-100 | SMA905 |
| 638 | 130 | AWMO-A-638-IF(F)-130 | FC/PC |
| | 130 | AWMO-A-638-IF(S)-130 | SMA905 |
| 650 | 130 | AWMO-A-650-IF(F)-130 | FC/PC |
| | 130 | AWMO-A-650-IF(S)-130 | SMA905 |

## Part Numbering Schema

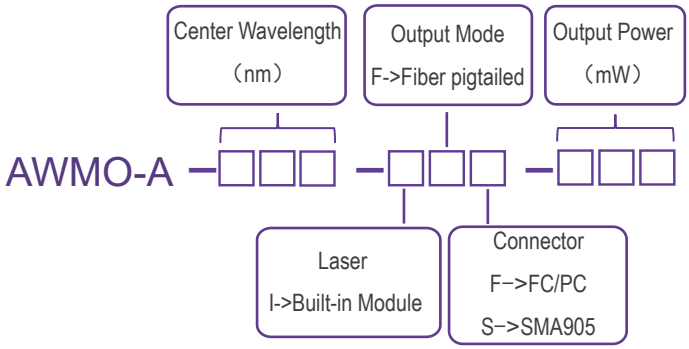


## Mechnical Drawings (mm)

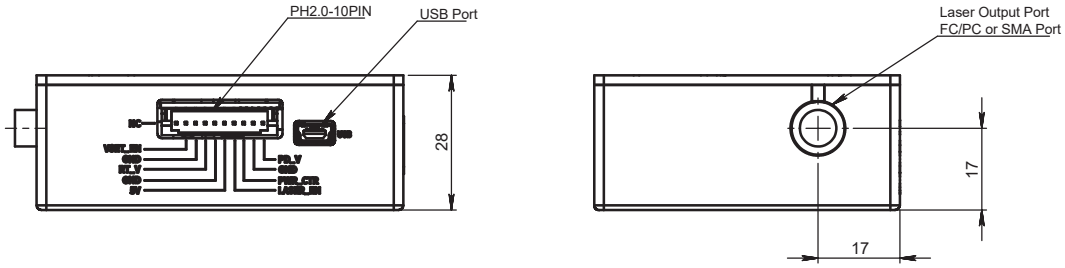


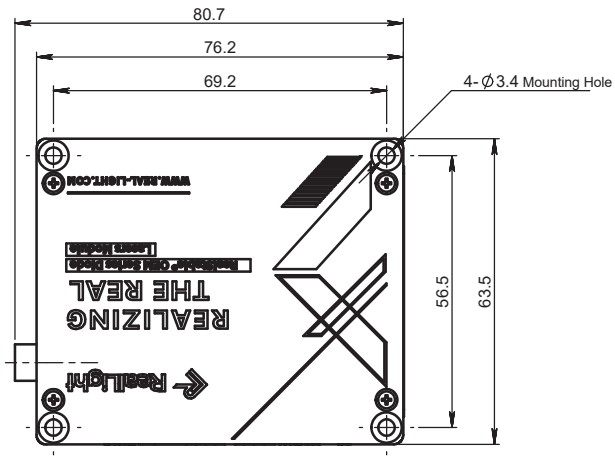


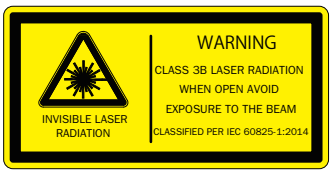


| Pin Descriptions | | |
|---|---|---|
| **PIN** | **Function** | **Description** |
| 1 | NC | NC |
| 2 | VSET_ENABLE | Set to low-level to control power through PIN8, high level or left floating: the laser outputs at rated power |
| 3 | GND | Signal Ground |
| 4 | RTV | Rt signal level, 1.5V for 25℃ |
| 5 | GND | Input Power Ground |
| 6 | +5V | 5VDC/2A |
| 7 | LASER ENABLE | Set to high-level to enable the laser, low-level or suspend to disable LD |
| 8 | Power Control | Apply 0-1.2V to control output power (0-100% full power adjustability) |
| 9 | GND | Signal Ground |
| 10 | PDV | PD feedback signal (Not applicable for 405 nm and 450 nm) |