MCD Series 350ps Low Repetition Rate OEM Microchip Laser

MCD series microchip lasers are RealLight's passively Q-switched diode- pumped solid-state lasers. These lasers are equipped with compact OEM drive circuits, featuring small size, easy integration, excellent beam quality, stable pulse energy, etc. RealLight also provides isolators with corresponding wavelengths. Custom lasers with higher energy of 1~2mJ are available upon request.

Key Features

- Pulse width down to 350ps
- Pulse energy up to 500μJ
- High polarization direction stability
- Spatial mode TEM_{00}
- Compact structure and high reliability

Applications

Biomedical applications

Laser range finding

Laser ablation

Technical Specifications

Optical Parameters			
Wavelength（nm）		1064	
Repetition rate (kHz)		0.01	
Average power (mW)		2	5
Pulse energy (μJ)		200	500
Pulse width (ps)		350	
Power stability (RMS, @8h)		<3%	
Beam profile		TEM_{00}	
Beam full divergence (typ., mrad)	Horizontal @1/e²	8	6
	Vertical @1/e²		
Polarization ratio		P Polarization >100:1	
System Parameters			
Supply power voltage		12V 2A	
Control interface		SMA	
Power consumption (W)		≤10	
Power dimensions (W×H×L,mm)		60×25.2×150	
Laser head dimensions (W×H×L,mm)		45×33×120	57×33×130
Operation temperature (℃)		15~35	
Storage temperature (℃)		0~60	

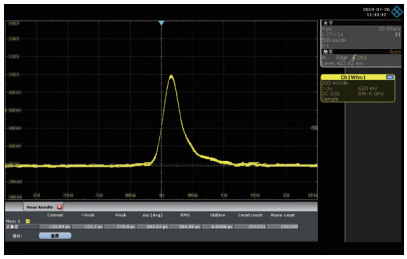

Typical Pulse

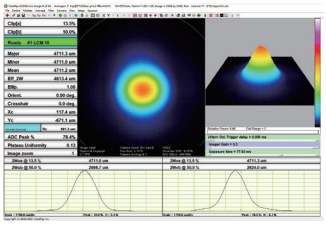

Beam Profile (1064nm)

1. All the data in the above table are the typical values obtained from the tests at room temperature of 25℃, and the final data is subject to the final test report.

Order Information

Wavelength(nm)	Part Number	Repetition rate(kHz)	Pulse energy(μJ)	Pulse width(ps)
1064	MCD-1064-0.01-200-350	0.01	200	350
	MCD-1064-0.01-500-350	0.01	500	350

Part Numbering Schema

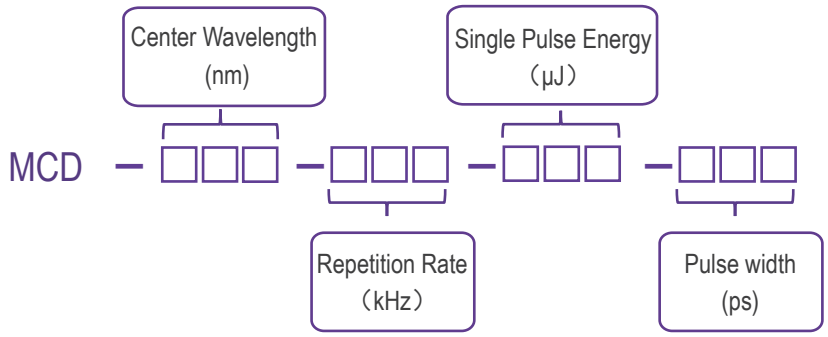

Mechanical Drawings (in mm)

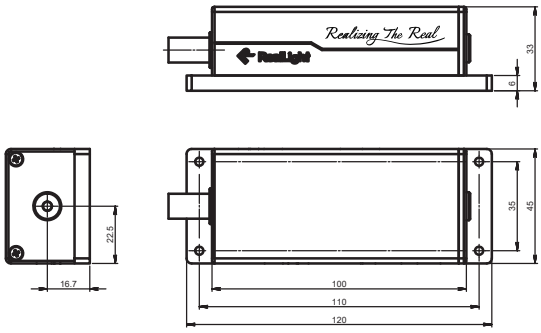

Laser Head (200μJ)

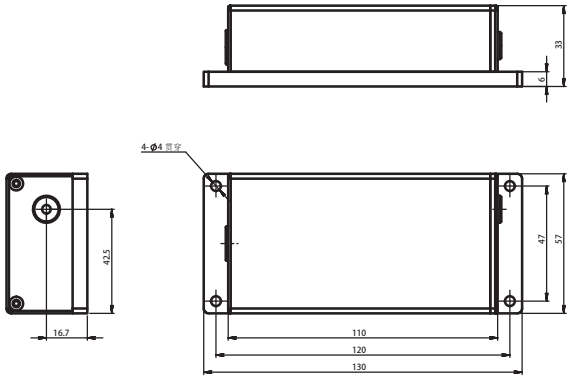

Laser Head (500μJ)

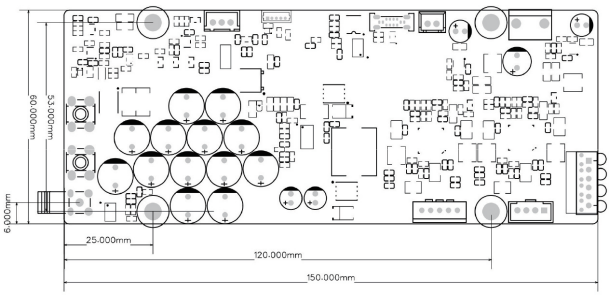

Laser Drive Board