NLMO Series Dual-wavelength Narrow Linewidth Laser



The NLMO-series multi-mode dual-wavelength narrow linewidth laser module is a patented product of RealLight. This series features switchable output of two narrow-linewidth, wavelength-stabilized laser beams. With compact size and easy integration, it caters to specialized applications in Raman spectroscopy. Custom wavelength combinations are available upon request.

Technical Specifications

Optical Parameters		
Center Wavelength (nm)	784 / 785	785 / 1064
Output Power (mW)[1]	500 / 500	500 / 800
Wavelength Tolerance (nm)	±0.5 (each wavelength)	
Linewidth (nm)	<0.1 (each wavelength)	
Wavelength Stability (typ., @4h)	±7 pm	
Power Stability (typ., @4h)	±2%(P-P)	
SMSR	40dB	
System Parameters		
Adjustbility % Full Power	0~100%	
Warm up Time (min)	15	
Control Interface	PH2.0~12P , USB	
Connector	FC/PC, SMA905	
Output Fiber	105 μm, 0.22 NA	
Supply Voltage	5VDC/2A	
Power Consumption (typ., W)	<5	
Storage Humidity	0~80% RH	
Storage Temperature（℃）	-25~55	
Operating Temperature（℃）	10~35 (heat sink is required)	
Weight (g)	<150	
Dimensions (mm)	86×63.5×32	

1. At output power below 200 mW, operation is near the laser threshold with degraded power stability.
2. All the data in the above table are the typical values obtained from the tests at room temperature of 25℃, and the final data is subject to the final test report.

Key Features

- Switch output between two wavelengths
- Excellent wavelength stability ±7pm@4h
- Built-in TEC, typical power consumption < 5W
- Compact design
- USB and I/O interface are available

Applications

Raman spectroscopy Bio-instrumentation

Ordering Information

Wavelength (nm)	Output Power (mW)	Part Number	Connector
784/785	500/500	NLMO-784/785-IF(S)-500/500	SMA905
	500/500	NLMO-784/785-IF(F)-500/500	FC/PC
785/1064	500/800	NLMO-785/1064-IF(S)-500/800	SMA905
	500/800	NLMO-785/1064-IF(F)-500/800	FC/PC

Part Numbering Schema

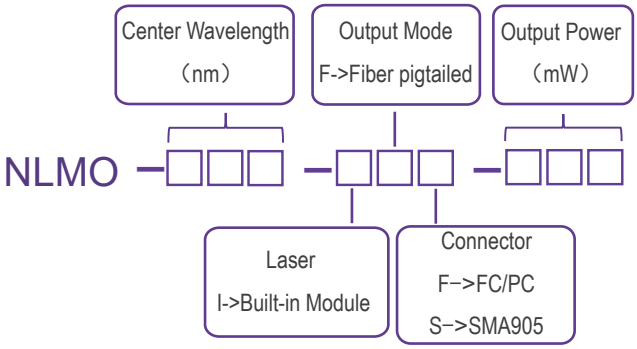

Mechnical Drawings (mm)

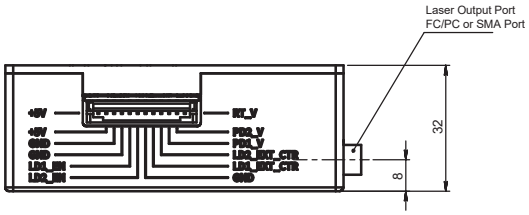

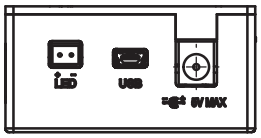

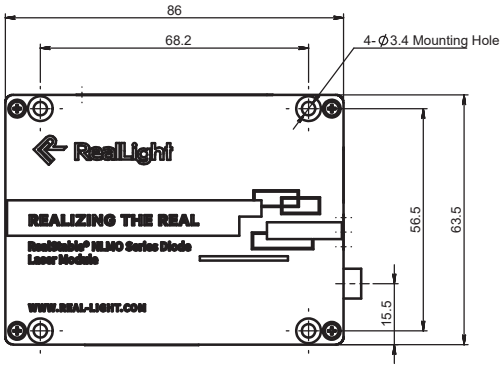



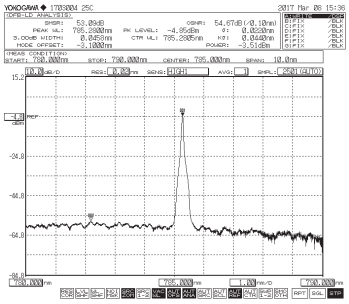

785nm laser spectrum
（SMSR＞40dB）

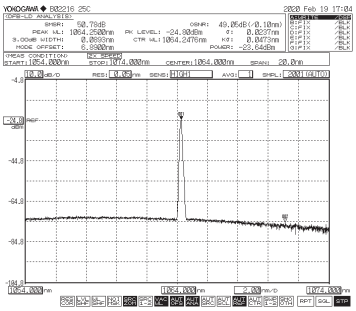

1064nm laser spectrum
（SMSR＞40dB）

Pin Descriptions		
PIN	Function	Description
1	+5V	5VDC/2A
2	+5V	5VDC/2A
3	GND	Input Power Ground
4	GND	Input Power Ground
5	LD1_INTERLOCK	Set to high-level to enable LD1, low-level or suspend to disable LD1
6	LD2_INTERLOCK	Set to high-level to enable LD2, low-level or suspend to disable LD2
7	GND	Signal Ground
8	LD1 External Power Control	Analog signal 0-1.2V to control output power from 0% to 100%
9	LD2 External Power Control	Analog signal 0-1.2V to control output power from 0% to 100%
10	PD1_Power Monitor	PD1 feedback signal, 0.5V for 500mW
11	PD2_Power Monitor	PD2 feedback signal, 0.5V for 500mW
12	RT Monitor	Rt signal level, 1.25V for 25°C