NLM Series Dual-wavelength Narrow Linewidth Laser



The NLM-series multi-mode dual-wavelength narrow linewidth laser is a patented product of RealLight. This product series enables switchable output of two narrow-linewidth, wavelength-stabilized laser beams to meet specialized applications in the Raman spectroscopy industry. Equipped with upper-computer control software, the laser allows real-time monitoring of operating status and supports online firmware upgrade. Custom wavelength combinations are available upon request.

Technical Specifications

Optical Parameters		
Center Wavelength (nm)	784 / 785	785 / 1064
Output Power (mW)[1]	500 / 500	500 / 800
Wavelength Tolerance (nm)	±0.5 (each wavelength)	
Linewidth (nm)	<0.1 (each wavelength)	
Wavelength Stability (typ., @4h)	±7 pm	
Power Stability (typ., @4h)	±2%(P-P)	
SMSR	40dB	
System Parameters		
Adjustbility % Full Power	0~100%	
Warm up Time (min)	15	
Modulation Input	Analog signal 0~5V	
Control Interface	USB, SMA	
Connector	SMA905, FC/PC	
Output Fiber	105 μm, 0.22 NA	
Supply Voltage	+12VDC	
Power Consumption (typ., W)	<20	
Storage Humidity	0~70% RH	
Storage Temperature (℃)	-25~55	
Operating Temperature (℃)	10~35	
Weight (kg)	1.2	
Dimensions (mm)	180×102×180.2	

1. At output power below 200 mW, operation is near the laser threshold with degraded power stability.
2. All the data in the above table are the typical values obtained from the tests at room temperature of 25℃, and the final data is subject to the final test report.

Key Features

- Linewidth < 0.1nm for each wavelength
- Excellent wavelength stability ±7pm@4h
- Constant frequency interval, support difference algorithm
- Built-in TEC, power stability ±2%
- Contains PC control, emergency stop button functions

Applications

Raman spectroscopy Bio-instrumentation

Ordering Information

Wavelength (nm)	Output Power (mW)	Part Number	Connector
784/785	500/500	NLM-784/785-IF(S)-500/500	SMA905
	500/500	NLM-784/785-IF(F)-500/500	FC/PC
785/1064	500/800	NLM-785/1064-IF(S)-500/800	SMA905
	500/800	NLM-785/1064-IF(F)-500/800	FC/PC

Part Numbering Schema

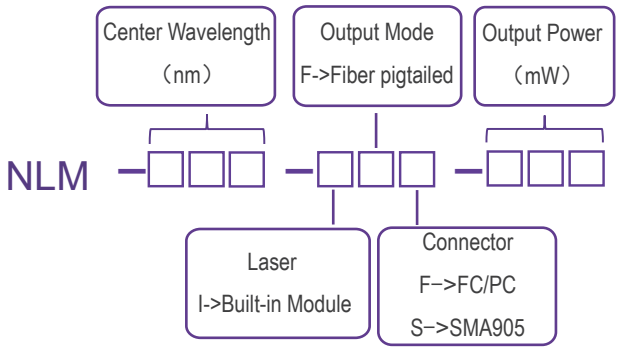

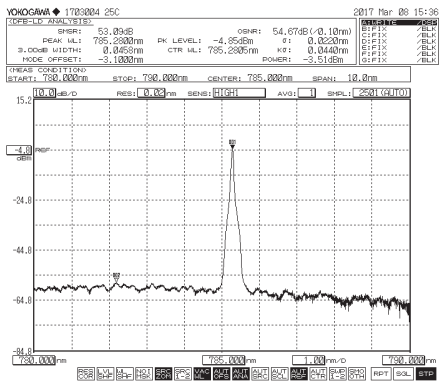

785nm laser spectrum（SMSR＞40dB）

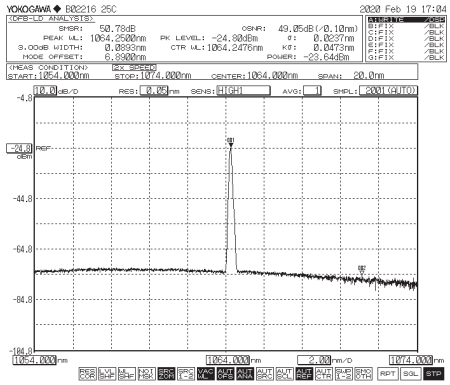

1064nm laser spectrum（SMSR＞40dB）

Mechnical Drawings (mm)

